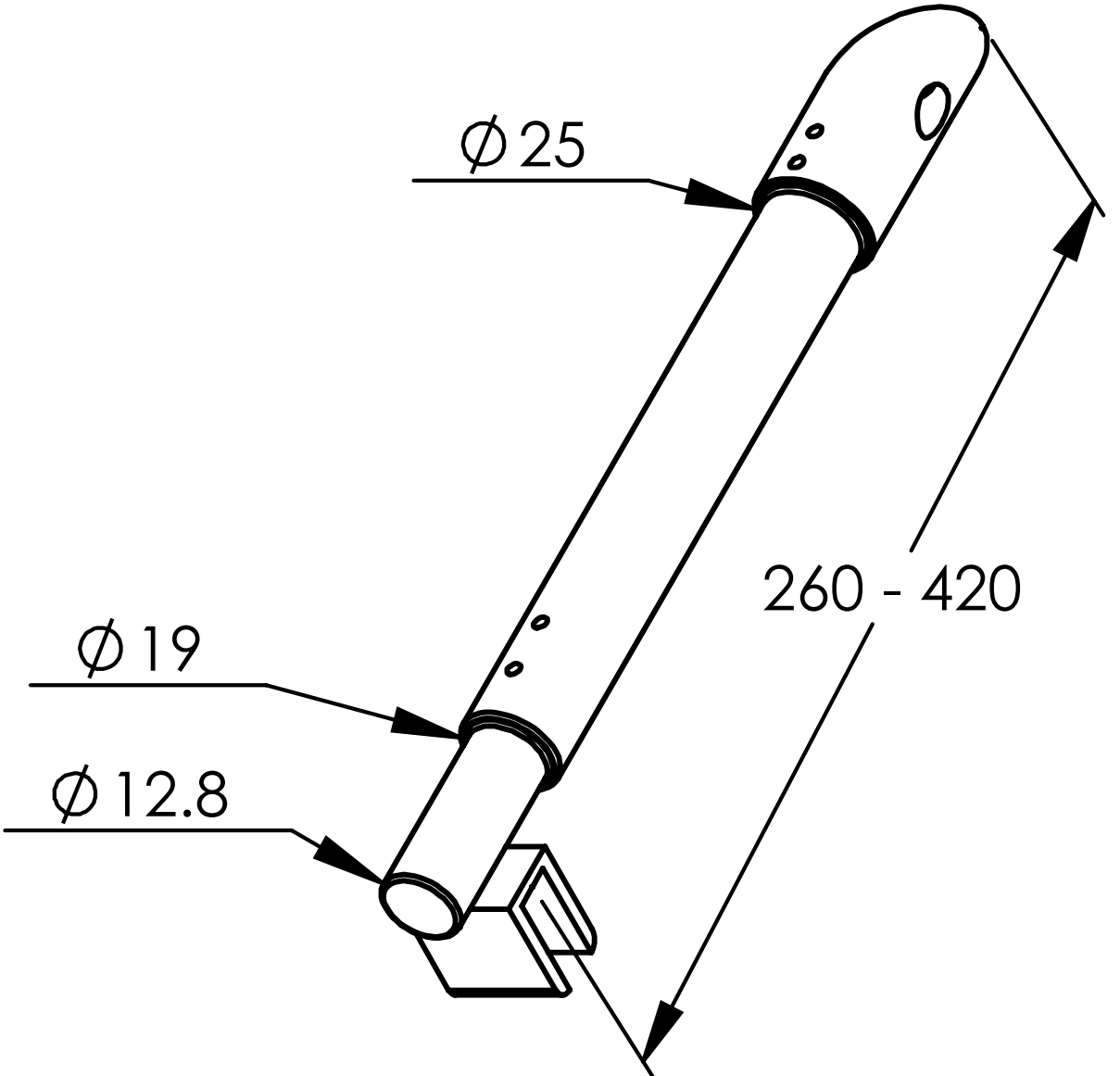
∅25
260 - 420
∅19
∅12.8